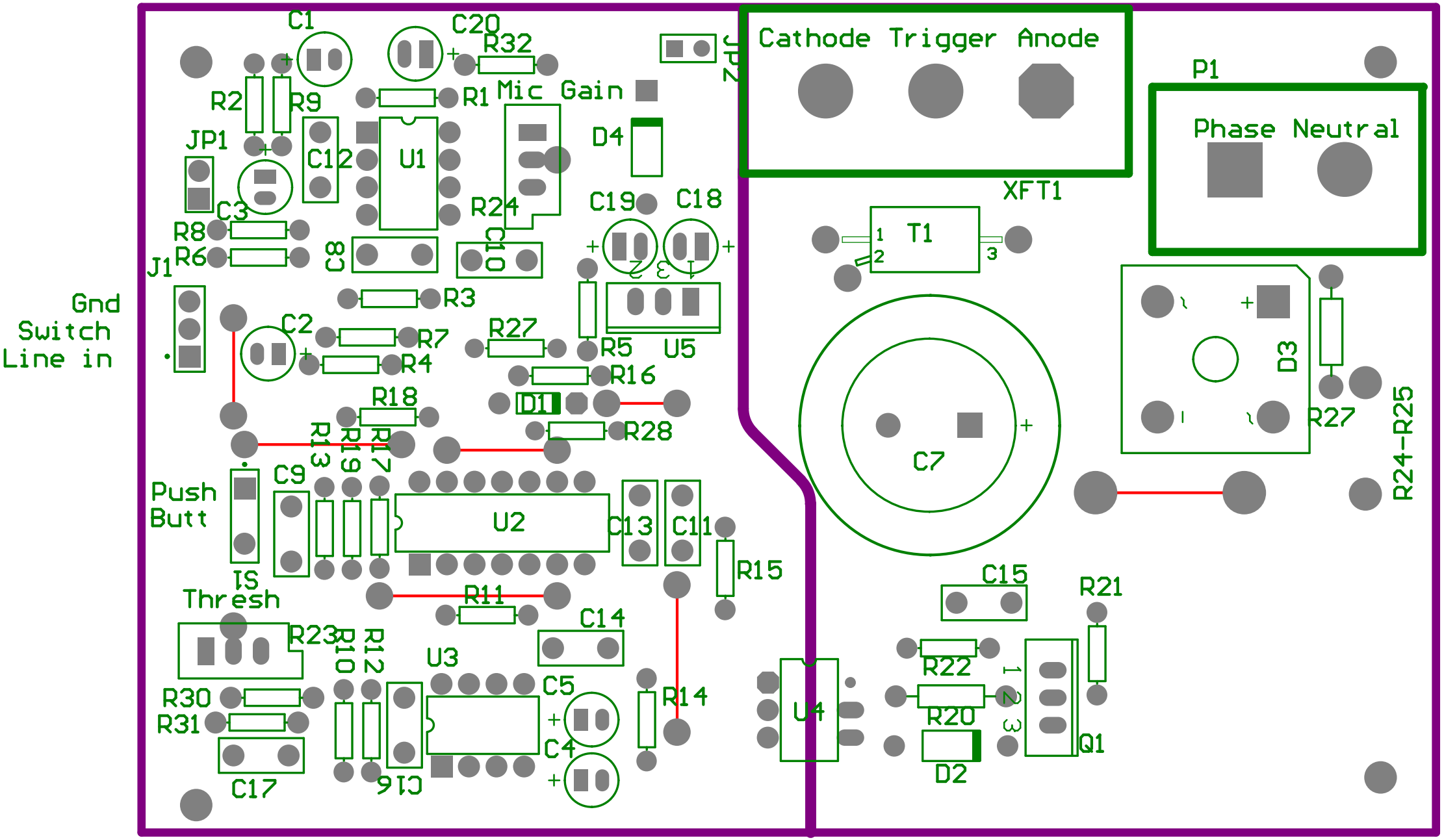
C1
C20
R32
JP2
Cathode Trigger Anode
P1
Phase Neutral
R2
R9
R1
Mic Gain
JP1
C12
U1
D4
XFT1
C3
R24
C19
C18
R8
C8
C10
T1
R6
J1
R3
Gnd
Switch
Line in
C2
R7
R27
R5
U5
R4
R16
D3
R18
D1
R28
R27
R24-R25
R13
R16
R17
C7
Push
Butt
C9
U2
C13
C11
S1
R15
C15
R21
Thresh
R11
C14
R23
R10
R12
U3
R22
R30
C5
R14
U4
R20
R31
C4
Q1
D2
C17
C16